ITEM NO.	PART NUMBER	DESCRIPTION	DRAWING #	QTY.
1	FI .1875 X 8 L 3.625	LENGTH: 3-5/8"	STOCK	2
2	FI .25 X 2.25 L 5.5	LENGTH: 5-1/2"	STOCK	1
3	FI .25 X 2.5 L 10	LENGTH: 10"	STOCK	1
4	FI .375 x 3 L 5.5	LENGTH:5-1/2"	STOCK	2
5	FP-TM2-1	TM-2000 TOP LINK PLATE	70-1107	2
6	FP-TM2-2	END CAP, TM-2000	70-2105	2
7	FP-TM2-3	SUPPORT ARM PLATE, TM-2000	70-1109	4
8	FP-TM2-14	LIFT BRKT, BOTTOM, TM-2000	70-1110	6
9	FP-TM2-24	ARM CYLINDER LINK, TM2000	70-1108	1
10	HD-RD 2 x .25	RING DEE 2x1/4	PURCHASED	1
11	ST 3 x .3125 L 85	LENGTH: 85"	STOCK	2
12	ST 2x11ga. L 85	LENGTH: 85"	STOCK	2

REVISIONS			
REV.	DESCRIPTION	DATE	APPROVED
B	UPDATED TO MATCH 3D MODEL	11/14/2012	
C	UPDATED TO SHOW REVISED FP-TM2-1	2/22/2013	
D	REMOVED RT 4x2, FI 1/4x2-1/2 & SM-12ga. ADDED FI-1/4x2-1/4	4/11/2013	
E	ADDED (2) FP-TM2-14	1/5/2016	

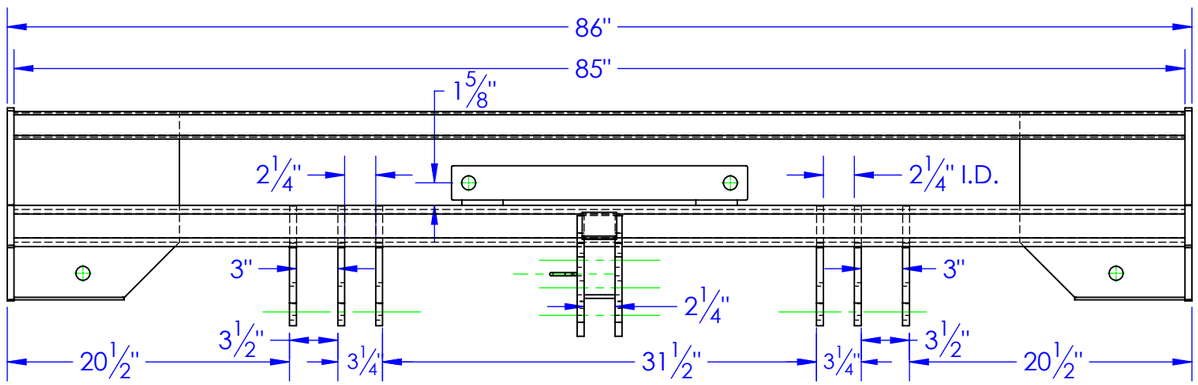

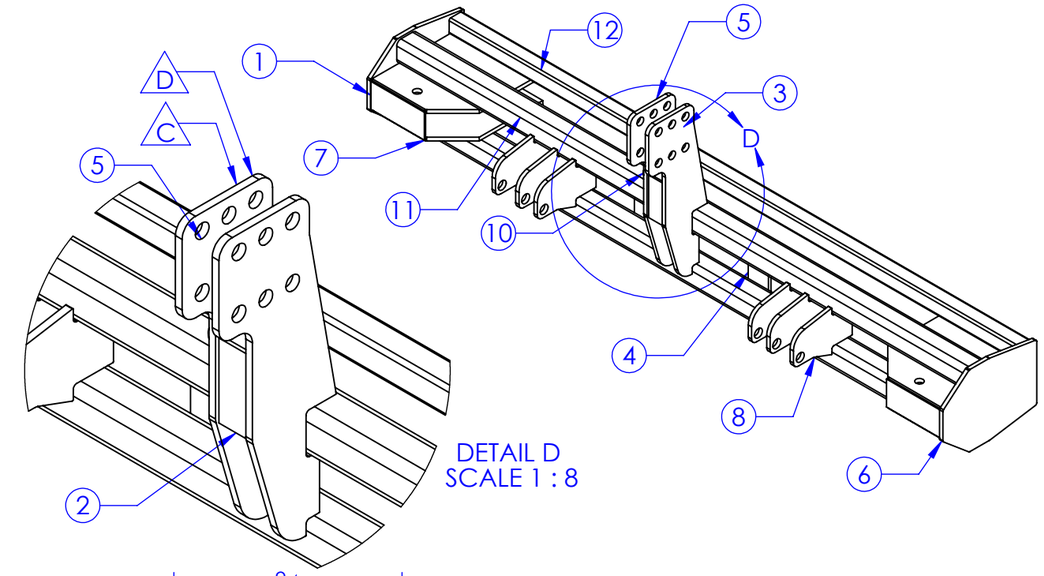

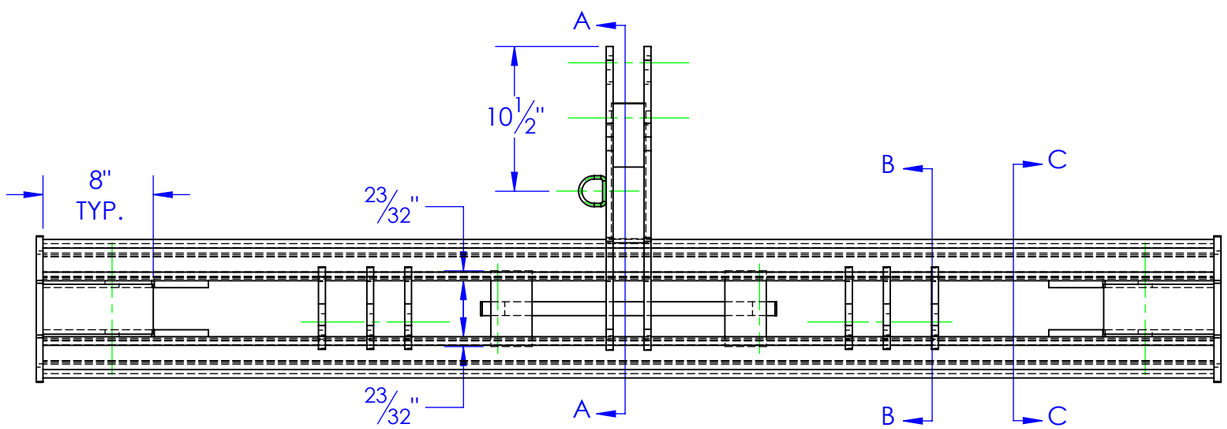

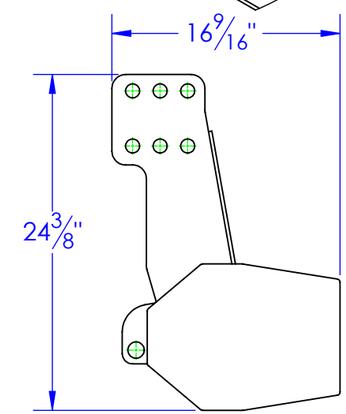

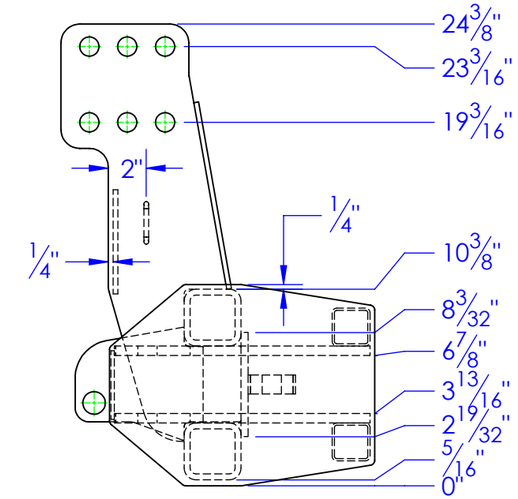

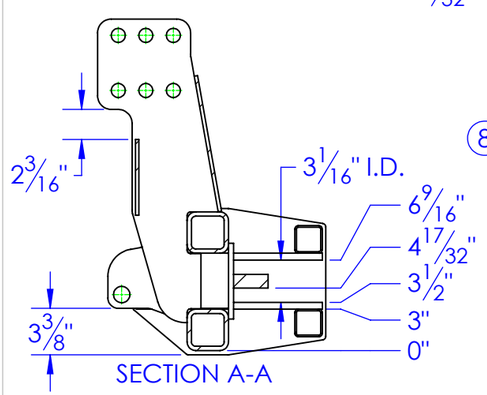

SECTION A-A

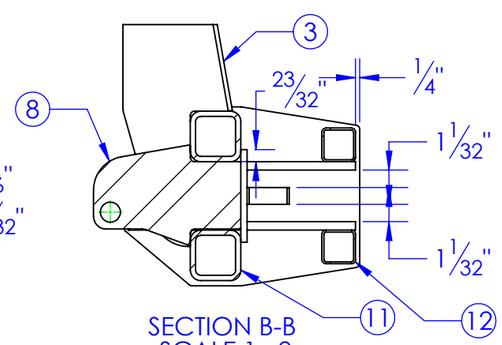

SECTION B-B
SCALE 1 : 9

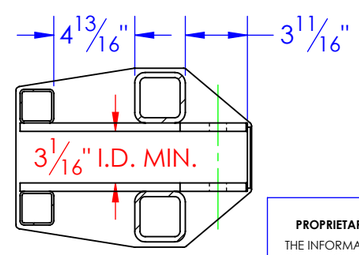

SECTION C-C
SCALE 1 : 9

PROPRIETARY AND CONFIDENTIAL

THE INFORMATION CONTAINED IN THIS DRAWING IS THE SOLE PROPERTY OF <INSERT COMPANY NAME HERE>. ANY REPRODUCTION IN PART OR AS A WHOLE WITHOUT THE WRITTEN PERMISSION OF <INSERT COMPANY NAME HERE> IS PROHIBITED.

UNLESS OTHERWISE SPECIFIED:

DIMENSIONS ARE IN INCHES
TOLERANCES:
FRACTIONAL ±1/16
ANGULAR: MACH ± 1 BEND ±
TWO PLACE DECIMAL ±010
THREE PLACE DECIMAL ±005

MATERIAL

DO NOT SCALE DRAWING

	NAME	DATE
DRAWN	CAITLYN	1/6/2016
PART #		
ASM #	SUB-TM2-20	

COMMENTS:

MAIN BODY WELDMENT, TM2000

P.O. BOX 248, SABETHA KS. 66534
(785) 284-3674 FAX (785) 284-3931

TRIPLE C INC.

SIZE	DWG. NO.	REV
B	70-1100 E	E

SCALE: 1:11 | WEIGHT: 401.13 | SHEET 1 OF 1